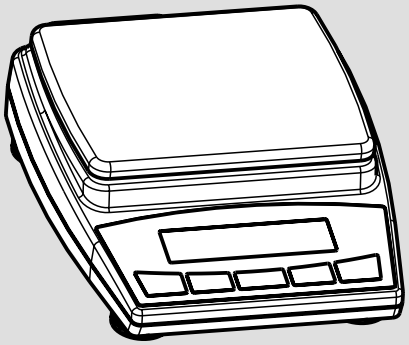

Precisa Balances Series BJ

Operating Instructions

Precisa

The Balance of Quality

350-8129-000

Identification

The present operating instructions apply to Precisa balance of the BJ-Series with five-key control panel.

Copyright

Introduction

What you should know about these Operating Instructions

Precisa balances are simple and functional to operate.

Nevertheless, you should read through these operating instructions in their entirety, so that you can make optimal use of the full potential and the diverse possibilities of the balance in your daily work.

These operating instructions contain guidance in the form of pictograms and keyboard diagrams, which should help you in finding the required information:

- Key names are presented in quotation marks and are accentuated by printing in semi-bold script: «**ON/OFF**».
- In the explanation of the operating steps, the appropriate display for the current operating step is shown for clarity at the left alongside the list of operating steps:

Display shows	List of the Operating steps
g or kg or Bht	• Press «**MODE**» button repeatedly. “g”, “kg” or “Bht” appears in the display.

- For the labelling of dangers and advice, please see Chapter 1 “Safety”.

Guarantee-card

A guarantee-card, which was filled in by your Precisa dealer before handing over the balance, is enclosed with the instruction manual.

❗ NOTE
Check, if the guarantee-card is enclosed with these operating instructions and is completely filled out.

1 Safety

1.1 Representations and symbols

Important instructions, which involve safety, are highlighted with the appropriate action:

⚠ DANGER

Warning of a possible danger, which can lead to death or to serious injuries.

⚠ CAUTION

Warning of a possibly dangerous situation, which can lead to less severe injuries or damage.

! NOTE

Tips and important rules on the correct operation of the balance.

1.2 Safety recommendations

- In using the balance in surroundings with increased safety requirements the corresponding regulations must be observed.
- The balance may only be used with the power adaptor (stamped: Precisa) supplied exclusively for use with the Precisa balance.
- Before inserting the power adaptor, make sure that the operating voltage stated on the power adaptor agrees with the mains voltage. If not, please refer to Precisa Customer Service.
- If the power adaptor or its cable is damaged, the balance must immediately be disconnected from the electricity supply (pull out the power adaptor). The balance may only be operated with a power adaptor in perfect condition.

- If there is any reason to believe that it is no longer possible to operate the balance without danger, the balance is to be immediately unplugged from the electricity supply (pull out power adaptor) and secured against inadvertent operation.
- In carrying out maintenance work, it is essential to heed the recommendations in Chapter 11 “Maintenance and servicing”.
- The balance must not be operated in an area subject to explosion risks.
- Take care when weighing liquids that no liquid is spilt into the inside of the balance or into connections on the rear of the equipment or the power adaptor.
  If liquid is spilt on the balance, the latter must immediately be unplugged from the mains electricity supply (pull out power adaptor).
  The balance may be operated after it has first been re-checked by a Precisa Service technician.
- The operating instructions must be read by each operator of the balance and must be available at the workplace at all times.

2 Your balance

2.1 Functions and Construction

The versatile weighing programs allow you to use the Precisa balances of the BJ-Series not only for simple weighings but also in a simple manner for carrying out various weighing applications such as, for example, percentage- or component counting weighings and document the measurements obtained accurately and unequivocally.

The most important basic production features of the Precisa BJ-Series include:

- Anti-theft encoding with four-figure numerical code
- Multi-stage password protection for the program menus
- ICM-Autocalibration (intelligent calibration mode)
- 5-key multifunction control panel
- RS232/V24 serial interface for data transfer
- Storable user-configuration (UMM User Menu Memorized)
- Functions programmed ex-works for:
  – Parts counting
  – Percentage weighing
  – Weighing in different, internationally-valid units
- Computer functions

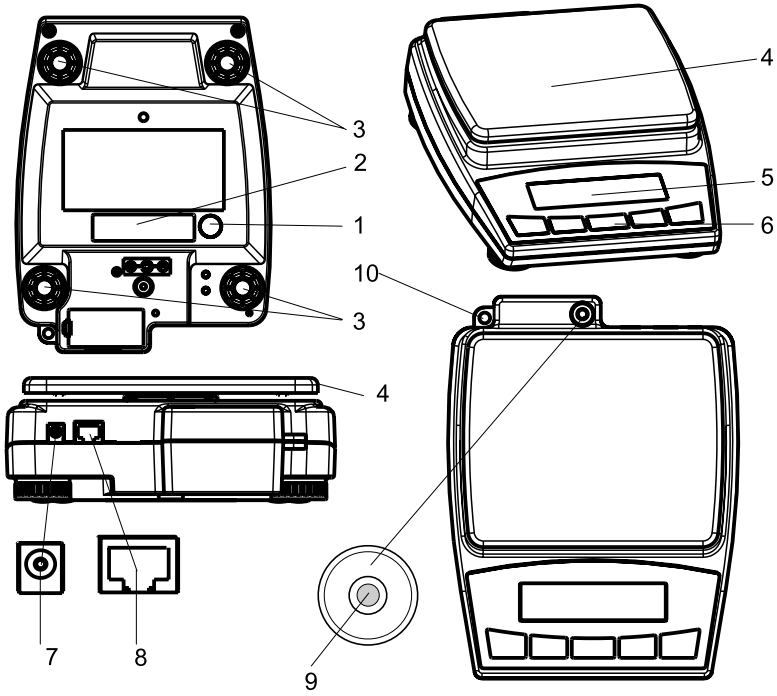

Fig. 2.2 Construction of the balance

1 Cover of the device for under-floor weighings
2 Nameplate
3 2 or 4 adjustable feet (for levelling)
4 Weighing pan
5 Display
6 5-key control panel
7 Connecting socket for power adaptor
8 RS232-Interface
9 Bubble level
10 Eyelet for attaching a safety chain

2.2 Application, conformity

2.2.1 Correct use of the balance

The balance may only be used for the weighing of solid-materials and of liquids filled into secure containers.

The maximum allowable load of the balance must never be exceeded, otherwise the balance may be damaged.

In using the balance in combination with other appliances made by Precisa as well as with appliances produced by other manufacturers, the current regulations for the safe use of the relevant attachments and their application in accordance with instructions must be observed.

2.2.2 Conformity

The balance has been manufactured and tested in accordance with the standards and recommendations set out in the enclosed certificate of conformity.

The power adaptor produced for the operation of the balance and intended exclusively for this application, complies with the electrical protection class II.

2.3 Technical data

- **Mains connection**
  – 115 or 230V (+15/-20%); 50 to 60Hz
- **Power consumption**
  – without peripheral appliances 1.0 W
- **RS232/V24 Interface**
- **Allowable ambient conditions**
  – Temperature: 5°C ... 40°C
  – Relative humidity: 25%... 85%, non-condensing

If you have any questions on the technical data or require detailed technical information on your balance, please contact your Precisa Technical Representative.

2.4 Labelling

The balance shows the following labels:

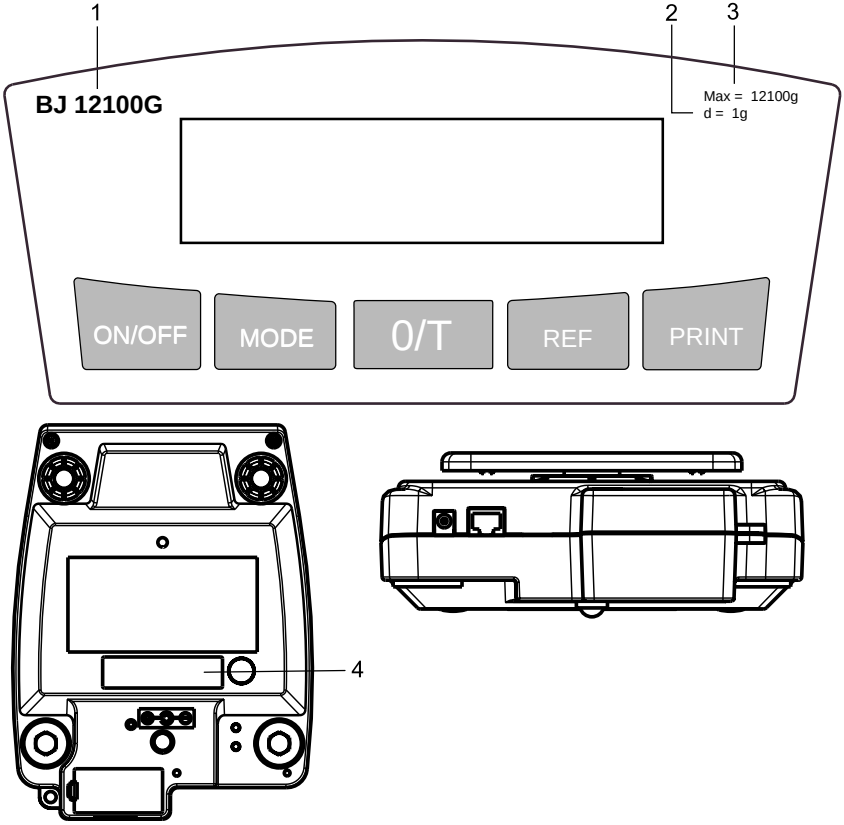

Fig. 2.3 Balance labels

Label	Location of label
Nameplate (1)	Casing-front, left
Readability (2)	Casing-front, right, bottom
Weighing range (3)	Casing-front, right, top
Model plate (4)	Casing-underside, centre rear

3 Starting up

3.1 Unpacking the balance

Precisa balances are delivered in an environmentally-friendly package, specifically developed for this precision instrument, which provides optimal protection for the balance during transportation.

! NOTE
Retain the original packaging in order to avoid transportation damages when shipping or transporting the balance and to allow the balance to be stored in the best conditions if it is out of operation for an extended period.

In order to avoid damage, attention must be given to the following points when unpacking the balance:

- Unpack the balance quietly and carefully. It is a precision instrument.
- When outside temperatures are very low, the balance should first be stored for some hours in the unopened transport package in a dry room at normal temperature, so that no condensation settles on the balance when unpacking.
- Check the balance immediately after unpacking for externally visible damage. If you should find transport damages, please inform your Precisa Services representative immediately.
- If the balance is not to be used immediately after purchase but only at a later time, it should be stored in a dry place where fluctuations in temperature are as low as possible (see Chapter 12 “Transport, storage and disposal”).
- Read through these operating instructions, even if you already have experience with Precisa-balances, before you work with the balance and pay attention to the Safety recommendations (see Chapter 1 “Safety”).

3.2 Scope of delivery

Inspect delivery for completeness immediately on unpacking all components.

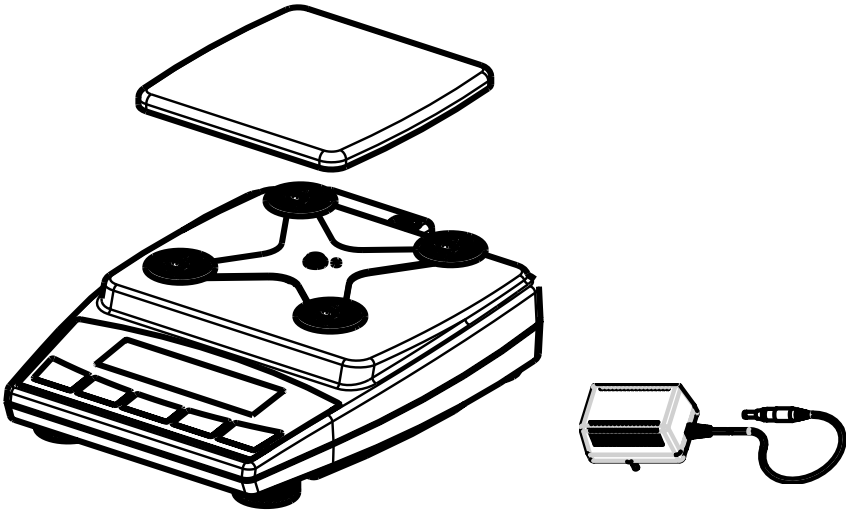

Fig. 3.1 Scope of delivery

Component delivered	**present** yes / no
Balance with weighing pan support	
Weighing pan	
Power adaptor	
Operating instructions	
Guarantee-card	
Conformity note	

Tab. 3.1: Check list for the scope of delivery

3.3 Assembly of the balance

The balance is delivered in partly dismantled condition. Assemble the individual components in the following sequence (see fig. 2.1 and fig. 2.2).

- Place the weighing pan.
- Insert the power adaptor cable plug into the socket at the rear of the balance.

! NOTE
All parts must fit together easily. Do not apply force. Precisa Customer Service will be pleased to help you with any problems.

3.4 Choice of a suitable location

The balance location must be chosen in such a way as to guarantee perfect functioning of your balance, so that the allowable ambient conditions (see Chapter 2.3 “Technical data”) are maintained and, in addition, so that the following prerequisites are met:

- Put the balance on a solid, firm and preferably vibration-proof, horizontal base
- Make sure that the balance cannot be shaken or knocked over
- Protect from direct solar radiation
- Avoid drafts and excessive temperature fluctuations

! NOTE
With difficult environment-conditions (where the balance may be easily shaken or subject to vibration) the balance can nevertheless provide accurate results through suitable adjustment of the stability control (see Chapter 5.5 “Weighing mode”).

3.5 Checking the mains voltage

The following Safety recommendations must be observed when connecting the balance to the mains:

⚠ DANGER

The balance may only be operated with the power adaptor supplied.

Check before connecting the power adaptor to the mains supply, that the operating voltage stated on the power adaptor agrees with the local mains voltage.

If the operating voltage is not the same as the mains voltage, the power adaptor must on no account be connected to the mains supply. Contact the Precisa-Customer Service.

3.6 Levelling the balance

To function properly, the balance must be precisely horizontal.

The balance is fitted with one „bubble level" and two or four adjustable feet for level-control, with the aid of which it is possible to compensate for small height differences and/or unevennesses in the surface on which the balance is standing.

The screw feet must be adjusted so that the air bubble is precisely in the centre of the sight glass of the bubble level (see Fig. 3.2 Correct levelling with the aid of the bubble level).

Incorrect **Correct**

Fig. 3.2 Correct levelling with the aid of the bubble level

! NOTE

In order to get exact measurements, the balance must again be carefully levelled after each relocation.

3.7 Calibration of the balance

Since the Earth's gravity is not the same everywhere, each balance must – in accordance with the underlying physical weighing principle – be adjusted to compensate for the gravity at each location. This adjustment process, known as „calibration", must be carried out on initial installation and after each subsequent relocation. In order to get exact measurements, it is recommended moreover, that the balance should also be calibrated intermittently during the weighing operation.

! NOTE

The balance must be calibrated on initial installation and after every relocation.

If you work in accordance with „Good Laboratory Practice GLP" observe the prescribed intervals between calibrations (adjustments).

The setting of the calibration is effected in the configuration menu.

With the aid of the „Intelligent Calibration Mode" ICM the balance can itself determine the size of the calibration weight, which enables an exact calibration with different size weights (in 10 g, 50 g, 100 g and 500 g steps, depending on implementation).

3.8 Dual Range and Floating Range balances

With the Precisa Dual Range balances, weighing is always first carried out in the small, more exact range. Only when the small range is exceeded will the balance switch automatically into the bigger range.

The Floating Range balances have a 10-fold more precise fine range, which is movable over the entire weight range. By pressing the tare key «**T**» the fine-area can be called up as often as required over the entire weight range.

4 Modes of operation and operating

4.1 Switching on the balance

• Press «**ON/OFF**» to switch on the balance.
The balance carries out a self-diagnosis in order to check the most important functions. After completion of the start-up process (approximately ten seconds) „Zero“ appears in the display.

The balance is ready for operation and is in the weighing mode.

4.2 Auto-Standby Mode

The balance is equipped with an Auto-Standby mode, which can be activated or deactivated in the configuration menu.

If the Auto-Standby mode is activated, the balance automatically switches to Standby some time after the last weighing or key operation (current-saving function).

The delay before switching to Standby is defined in the configuration menu (see Chapter 5.5 “Weighing mode”).

4.3 Setting and storing the configuration

- Press «**ON/OFF**», to switch on the balance.
- Continue to hold down the «**MODE**» and the «**0/T**»-button during the start-up process, until the desired configuration appears on the display and then release the button:

  „ConF FCT”: Load factory configuration.

  „ConF USR”: Load user configuration.

  „StorE USR”: Store present configuration as user configuration.

4.4 Significance of the two main menus

The balance has two main menus available: the configuration menu and the application menu.

The basic-program of the balance is defined in the **configuration menu**. With this, you can either work with the basic-configuration programmed ex-works, or define and store a user-configuration adapted to your specific needs.

In the **application menu**, you define a working program, which is suited to the specific weighing problem.

4.5 Activating the two main menus

4.5.1 Activating the configuration menu

- Press «**ON/OFF**» to switch on the balance.
- Continue to hold down the «**MODE**»-button during the start-up process (approximately 10 seconds), until the currently set language appears.
- Now you can change the configuration menu.

4.5.2 Activating the application menu

- After the start-up process has finished, press «**MODE**» until the currently set application („... APP”) appears on the display. You are now in the application menu.

4.6 How the menu control operates

The configuration menu and the application menu each have a main path and up to two sub-paths in which the parameters for the different function programs of the balance are defined.

Moving in the menu path:

- «**MODE**» short depression: In path to the right or start input.
- «**MODE**» long depression: In path downwards.
- «**PRINT**»-button: In path to the left (in main path exit menu).

Input:

- «**MODE**» short depression: Change value or position.
- «**MODE**» long depression: Change one position to the right or terminate input.
- «**PRINT**»-button: Terminate input.

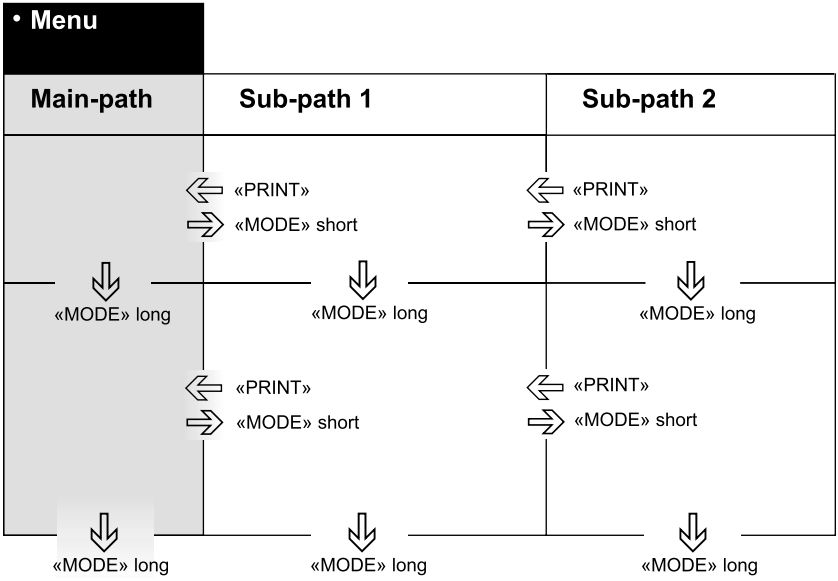

4.6.1 Control panel

Four of the five keys of the Multifunctional Control Panel serve multiple functions (functions for the weighing mode and for the programming mode respectively).

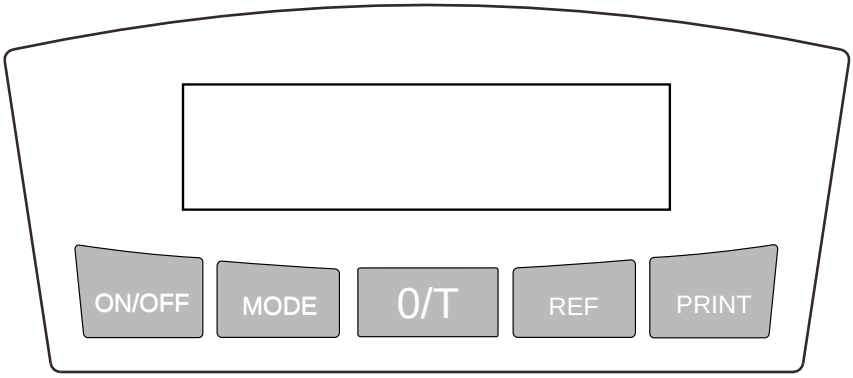

Fig. 4.1 The Five-key Control Panel

4.6.2 Operating

Key	Name	Function during weighing
ON/OFF	**«ON/OFF»**	• Switching the balance on and off
MODE	**«MODE»**	• Calling up the configuration menu and the application menu • Switches between the Basic program and the chosen application
0/T	**«0/T»**	• Initiate Tare/Zero Function and/ or Calibration Function
REF	**«REF»**	• Run application (see Chapter 6 “Working with the applications”)
PRINT	**«PRINT»**	• Start print function • Exit the menu

Tab. 4.1 Key functions

NOTE

For the operation of the «**0/T**» and «**PRINT**» see Chapter 7 “Special operating keys”.

For an illustration of the method of operation see Chapter 10 “Practical examples”.

4.6.3 Display

The balance display has two areas (1 and 2).

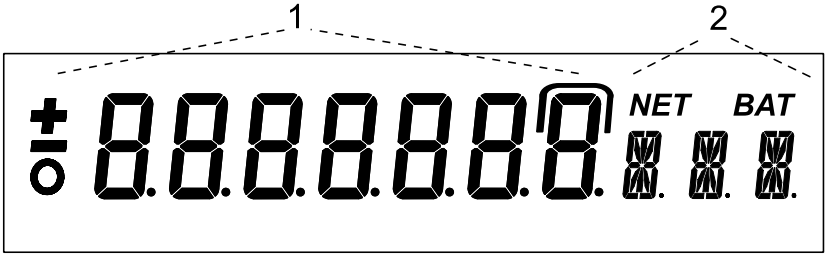

Fig. 4.2 Display

The display contains the 7-figure measurement display (1) as well as various symbols (2).

4.7 Password protection of the menus

The two main menus of the balance can be protected by a freely selectable, four-figure password against unintentional changes.

- With password protection deactivated, any operator can change the balance configuration and application menus.
- With „MED“ password protection activated, only the configuration menu is protected against unintentional changes.
- With „HI“ password protection activated, both the configuration menu and the application menu are protected against unintentional changes. Only after entering the correct, four-figure password can changes be made to the configuration menu and the application menu.

To activate the password protection and to alter the code programmed in the works to one which you have chosen yourself, see Chapter 5.8 “Password protection”.

NOTE

The password protection is deactivated at the works.

The **pre-programed password** set in the works is: **7 9 1 4**

This password is the same for all Precisa balances and is always valid, in parallel with a self-selected password.

Make a note of your **personal password**.

4.8 Anti-theft encoding

The balance can be protected against theft by a freely selectable, four-figure numerical code:

- With anti-theft encoding deactivated, the balance can be switched on again and operated after interruption of the power supply without entering a code.
- With anti-theft encoding activated, the balance requires the entry of the four-figure code after each interruption to the power supply.
- If the code is input incorrectly, the balance is blocked.
- If the balance is blocked, it must first be disconnected from the power supply, then reconnected and unblocked by entering the correct four-figure code.
- After seven consecutive incorrect entries the display will read „Err 5”. In this case, only Precisa Service can unblock the balance again.

NOTE

The anti-theft-encoding is deactivated in the works.

The **pre-programmed code** set by the works is: **8 9 3 7**

This code is the same for all Precisa balances. For reasons of security you should therefore always select your own code.

Keep your personal code in a safe place.

To activate the anti-theft encoding and to alter the code programmed in the works to one which you have chosen yourself, see Chapter 5.9 “Anti-theft encoding”.

5 Working with the configuration menu

This chapter describes the configuration menu and its functions.

To activate the menu, see Chapter 4.5 “Activating the two main menus” and Chapter 4.6 “How the menu control operates”.

5.1 Structure of the configuration menu

The basic adjustment of the balance is defined in the configuration menu:

Main path	Definable functions
UnIt-1 g	*Unit in which the results of the weighing are displayed*
PrInt SET	*Print formats; Type of values to be printed (individual values, continuous printout, time or load change dependent values, date, time, etc.)*
CAL SET	*Method of calibration*
ModE SET	*Stability mode (Quality of the balance location, Auto-Standby mode, zero correction, tare method*
IntErF SET	*Baud-rate, parity, handshake functions of the peripheral interface*
DAT-TIM SET	*Date and time (standard format or American format p.m. and a.m.)*
- - - - PWD	*Password protection for defining the menus*
- - - - COD	*Activating / deactivating and changing the anti-theft code.*
bAcKLit	*Activating / deactivating the backlight*
bEEP	*Activating/deactivating the acoustic feedback*

Tab. 5.1 Contents of the configuration menu

Printing conventions used in this document:

- The settings in the sub-paths pre-programmed in the works are printed in **bold** in these operating instructions.
- For greater clarity, only that part of the menu tree which corresponds to the function is shown with each description of the function.
- You will find the entire menu tree for the configuration menu in Chapter 15 “Configuration menu tree”.
- Explanations of the menu functions are printed in *italics*.

5.2 Selecting the weight unit

To activate the menu see Chapter 4.5 “Activating the two main menus” and Chapter 4.6 “How the menu control operates”.

• **Unlt-1**	**g**		
Unlt-1	**g**		*Gramme*
	kg		*Kilogramme*
	---		-----
	Bht		*Bath*

The balance can show results in different units, although with some balances display is not possible in milligrammes or kilogrammes because of the corresponding weight range.

Display	Weight unit	Conversion to grammes
g	Gramme	
(mg)	Milligramme	0.001 g
(kg)	Kilogramme	1000 g
GN	Grain	0.06479891 g
dwt	Pennyweight	1.555174 g
ozt	Troy ounce	31.10347 g
oz	Ounce	28.34952 g
Lb	Pound	453.59237 g
ct	Carat	0.2 g

Display	Weight unit	Conversion to grammes
C.M.	Carat Metric	0.2 g
tLH	Tael Hong Kong	37.4290 g
tLM	Tael Malaysia	37.799366256 g
tLT	Tael Taiwan	37.5 g
mo	Momme	3.75 g
t	Tola	11.6638038 g
Bht	Bath	15.2 g

Tab. 5.2 Possible weight units and conversion factors

5.3 Print functions

To activate the menu see Chapter 4.5 “Activating the two main menus” and Chapter 4.6 “How the menu control operates”.

• PrInt SET			
	A-StArt	ON	*Start print automatically on switching on / off*
		OFF	
	ModE	UST	*Individual print, each value*
		ST	*Individual print, stable value*
		LCH	*Print after load changes*
		CON	*Continuous print after every Integration time*
		TIM	*Continuous print with timebase*
	4	TIM	*Time base in seconds*
	Prt-gLP	**OFF**	*Empty*
		1	*Date and Time*
		2	*additional Product-Id*
		3	*additional Balance-Id*
		4	*additional Operator-Id*
	Prt-ALL	ON	*Gross, Tare and Units*
		OFF	*Empty*

When a peripheral device (for example a printer) is connected, the balance interface must be configured in the submenu „IntErf SET“ (see Chapter 5.6 “Interface-functions”).

5.4 Calibration functions

To activate the menu see Chapter 4.5 “Activating the two main menus” and Chapter 4.6 “How the menu control operates”.

• CAL SET			
	ModE	OFF	*Closed*
		EXT	*External*
		DEF	*External with user-defined weight (DEF n.nnn g)*
	0.000	DEF	*Calibration weight for DEF-Mode*

For the calibration of the balance see Chapter 3.7 “Calibration of the balance” and Chapter 14.2 “Notes on calibration”.

5.5 Weighing mode

To activate the menu see Chapter 4.5 “Activating the two main menus” and Chapter 4.6 “How the menu control operates”.

• Mode SET			
		0.08	Integration time in seconds
		0.16	
		0.32	
	StAbiL	LOW	*Setting the Stability control (instability of the balance location)*
		MED	
		HI	
	A-StAnd	**OFF**	*Auto-Standby not-active or active after nn minutes*
		5	
		10	
		30	
	A-ZEro	**ON**	*Automatic zero correction*
		OFF	
	tArE	**ST**	*Tare when load is stable / unstable*
		UST	

With the aid of the weighing mode functions, you describe the quality of the balance location (see Chapter 3.4 “Choice of a suitable location”).

With the aid of the Auto-Standby („A-StAnd“) function, you can define the period of non-use before the balance goes over automatically into the energy-saving mode.

With the aid of theTare-Mode („tArE“) function, you can define that only a stable or an unstable load is tared.

! NOTE
The Auto-Standby function only works with the automatic zero-correction activated (see Chapter 5.5 “Weighing mode”).

5.6 Interface-functions

To activate the menu see Chapter 4.5 “Activating the two main menus” and Chapter 4.6 “How the menu control operates”.

• IntErF SET			
	300	BDR	*Baud-rate*
	600		
	1200		
	2400		
	4800		
	9600		
	19200		
	7-E-1	PAR	*Parity*
	7-o-1		
	7-n-2		
	8-n-1		
	HAnd-SH	**NO**	*Handshake function*
		XON	
		HW	

With the aid of the interface functions, the RS232/V24 interface of

the balance is matched to the interface of a peripheral device (see Chapter 8 “Data transfer to peripheral devices”).

5.7 Date and time

To activate the menu see Chapter 4.5 “Activating the two main menus” and Chapter 4.6 “How the menu control operates”.

• DAT-TIM SET			
	31.12.99	D.M.Y	*Date*
	23.59.59	H.M.S	*Time*
	FORMAT	**STD**	*Standard*
		US	*US*

5.8 Password protection

To activate the menu see Chapter 4.5 “Activating the two main menus” and Chapter 4.6 “How the menu control operates”.

• - - - - PWD			
	ProtEct	**OFF**	*No protection*
		MED	*The configuration menu is protected*
		HI	*The configuration menu and the application menu are protected*
	- - - -	NEW	*Enter new password*

The password protection permits you to protect the application menu and/or the configuration menu against unintentional changes.

See Chapter 4.7 “Password protection of the menus” and Chapter 10.1.2 “Activation of password protection” for further information on password protection.

5.9 Anti-theft encoding

To activate the menu see Chapter 4.5 “Activating the two main menus” and Chapter 4.6 “How the menu control operates”.

• - - - - COD			
	ProtEct	**OFF**	*Encoding off*
		ON	*Encoding on*
	- - - -	NEW	*Enter new code*

If the anti-theft encoding is activated, a four-figure code must be entered after every interruption of the power supply in order to release the balance for use.

For further information on the anti-theft encoding see Chapter 4.8 “Anti-theft encoding”.

5.10 Backlight

To activate the menu see Chapter 4.5 “Activating the two main menus” and Chapter 4.6 “How the menu control operates”.

• BAcHlit		
	OFF	*Backlight off*
	ON	*Backlight on*
	AUT	*Backlight automatically*

5.11 Acoustic feedback

To activate the menu see Chapter 4.5 “Activating the two main menus” and Chapter 4.6 “How the menu control operates”.

• bEEP		
	OFF	*Acoustic feedback off*
	ON	*Acoustic feedback on*

6 Working with the applications

This chapter explains which applications the balance has and how these are operated (see also Chapter 4.5 “Activating the two main menus” and Chapter 4.6 “How the menu control operates”).

If **«PRINT»** is operated in an application, a report corresponding to the application is printed out.

6.1 Structure of the application menu

To activate the menu see Chapter 4.5 “Activating the two main menus” and Chapter 4.6 “How the menu control operates”.

The applications of the balance are called up using the application menu and adapted to the user's needs:

Main path	Definable functions
OFF APP	*Select application program*
SETUP	*Specify parameters for the selected application*
A-StArt OFF	*The selected application can, if required, be loaded automatically every time the balance is switched on*

Printing conventions:

- The settings for the sub-menus programmed in works are printed in **bold** in these operating instructions
- For a greater clarity, only that part of the menu tree which corresponds to this application is shown with each application description.
- You will find the complete menu tree for the application menu in Chapter 16 “Application menu tree”.
- Explanations of the menu functions are printed in *italics*.

6.2 Selecting an application

See Chapter 4.5 “Activating the two main menus” and Chapter 4.6 “How the menu control operates” for the activation of the application menu.

• **OFF** **APP**		
OFF APP		*No application selected*
UnItS		*Different units*
Count		*Parts counting*
PErcEnt		*Percent weighings*

In this function-field, select the desired application.

If a working-program is selected in the „--- APP“ menu, then only those sub-menus, which contain functions and parameters necessary to define the chosen application are shown in the „SETUP“ menu.

6.3 Changing application / weighing mode

To activate an application, it must first be selected in the application menu (see Chapter 6.2 “Selecting an application”).

- Press the «**MODE**»-button. The display will show either the name of the selected application „UnItS“, „Count“, ... or „BALAncE“ (for switching back to weighing mode).
  (If „OFF APP“ appears immediately, no application has yet been selected.)
- Release the «**MODE**»-button.
- The balance has now switched over to the application and you can run the application with the «**REF**»-button.
  (In the weighing mode the «**REF**»-button has no function).

6.4 Application «Units»

See Chapter 4.5 “Activating the two main menus” and Chapter 4.6 “How the menu control operates” for the activation of the application-menu.

• **SETUP**			
	UnIt-2	g	*Gramme*
		kg	*Kilogramme*
		---	-----
		Bht	*Bath*
		OFF	*switched off*

! NOTE

For basic operation, Unit 1 is defined in the configuration menu (standard unit for all weighings, if the working-program „UnItS“ is not called up, see Chapter 5.2 “Selecting the weight unit”).

Operation:

Start the application (see Chapter 6.3 “Changing application / weighing mode”).

- Press the «**REF**»-button until the desired unit appears on the display.
- Release the «**REF**»-button.

6.5 Application «Count»

See Chapter 4.5 “Activating the two main menus” and Chapter 4.6 “How the menu control operates” for the activation of the application menu.

• SETUP		
	5 REF	*Preseted reference number of pieces*

With the aid of the „Count“ program you can count items of uniform weight (screws, balls, coins, etc.).

Depending on the weight and tolerances of the objects to be counted, you should count a representative number of items for the regulation of the reference-weight.

Operation:

Start the application (see Chapter 6.3 “Changing application / weighing mode”).

– with the predefined reference:

- Place the set number of objects on the weighing pan.
- Press the «**REF**»-button briefly.

– with flexible reference:

- Place a number of objects on the weighing pan.
- Press the «**REF**»-button until „1 REF“ appears on the display.
- If the reference quantity is correct release the «**REF**»-button. Otherwise hold down the «**REF**»-button. More of the pre-defined values will appear (10, 25, 50, ...). As soon as the desired value appears release the «**REF**»-button. (The current value can be increased by 1 by briefly releasing and pressing the «**REF**»-button.)

6.6 Application «Percent»

See Chapter 4.5 “Activating the two main menus” and Chapter 4.6 “How the menu control operates” for the activation of the application menu.

• **SETUP**		
	dECIMAL **AUT**	*Automatic determination of the decimal places*
	0	*Display with 0 decimal places*
	1	*Display with 1 decimal places*
	2	*Display with 2 decimal places*
	3	*Display with 3 decimal places*

With the aid of the „PErcEnt“ program you can display and print out the weight of different measurements as a percentage of a previously defined reference weight.

Operation:

Start the application (see Chapter 6.3 “Changing application / weighing mode”).

- Place the reference weight on the weighing pan.
- Press the «**REF**»-button briefly.

7 Special operating keys

7.1 The Tare key «0/T»

- **Effects taring**
  – Ensure that the balance is in the weighing mode.
  – Briefly press «**0/T**».
  – The balance performs a tare operation.
- **Effects a calibration**
  – Ensure that the balance is in the weighing mode.
  – Keep «**0/T**» pressed until „CAL“ is displayed.
  – Release «**0/T**».
  – The balance carries out a calibration in accordance with the settings in the configuration menu (see Chapter 5.4 “Calibration functions”) and reports these by means of a printout..

! NOTE
A calibration and/or a calibration-test can be cancelled with «**ON/OFF**».

7.2 The Print key «PRINT»

- **Print out an individual value or a report**
  – Ensure that the balance is in the weighing mode.
  – Briefly press «**PRINT**».
  – The individual value or report will be printed out.
- **Print out a balance status**
  – Ensure that the balance is in the weighing mode.
  – Keep «**PRINT**» pressed until „StAtuS PRT“ is displayed.
  – Release «**PRINT**».
  – The balance status will be printed out.
- **Print out the application-setup**
  – Ensure that the balance is in the weighing mode.
  – Keep «**PRINT**» pressed until „APPLI PRT“ is displayed.
  – Release «**PRINT**».
  – The application-setup will be printed out.

8 Data transfer to peripheral devices

For data-transfers to peripheral devices, the balance is equipped with an RS232/V24-interface.

Before the data-transfer, the RS232 interface must be matched with the one in the peripheral device in the balance's configuration menu (see Chapter 5.6 “Interface-functions”).

- **Handshake**

The handshake is set to „NO” (none) in the works. It can be set to software handshake XON/XOFF, or to hardware handshake.

- **Baud rate**

Possible baud rates: 300, 600, 1200, 2400, 4800, 9600 or 19200 Baud.

- **Parity**

Possible parity: 7-even-1Stop, 7-odd-1Stop, 7-No-2Stop or 8-No-1Stop..

Parity	SB	1	2	3	4	5	6	7	8	SP
7-even-1	SB	1.DA	2.DA	3.DA	4.DA	5.DA	6.DA	7.DA	PB	SP
7-odd-1	SB	1.DA	2.DA	3.DA	4.DA	5.DA	6.DA	7.DA	PB	SP
7-no-2	SB	1.DA	2.DA	3.DA	4.DA	5.DA	6.DA	7.DA	1.SP	2.SP
8-no-1	SB	1.DA	2.DA	3.DA	4.DA	5.DA	6.DA	7.DA	8.DA	SP

SB: Start bit PB: Parity bit
DA: Data bit SP: Stop bit

8.1 Connection to peripheral devices

The balance can be connected to peripheral devices in three ways:

- **Standard, duplex connection**

Balance	RJ45	D25 / D9	Peripheral device
RS 232 out	2 ---------->	3 / 2	RS 232 in
RS 232 in	6 <----------	2 / 3	RS 232 out
GND	5 ----------	7 / 5	GND

- **Standard, duplex connection with additional hardware handshake in the peripheral device**

Balance	RJ45	D25 / D9	Peripheral device
RS 232 out	2 ---------->	3 / 2	RS 232 in
RS 232 in	6 <----------	2 / 3	RS 232 out
GND	5 ----------	7 / 5	GND
CTS	3 <----------	20 / 4	DTR
DTR	7 ---------->	5 / 8	CTS

8.2 Data-transfer

Display

S D6 D5 D4 D3 D2 D1 D0 U U U

The data-transfer takes place in ASCII code :

1	2	3	4	5	6	7	8	9	10	11	12	13	14	15	...	...	...
B	**B**	**B**	**S**	**D7**	**D6**	**D5**	**D4**	**D3**	**D2**	**D1**	**DP**	**D0**	**B**	**U**	**...**	**CR**	**LF**

B	Blank (space)
S	Sign (+ , -, space)
DP	Decimal Point
D0...D7	Digits
U ...	Unit
CR	Carriage Return
LF	Line Feed

NOTE

Unused positions are filled with spaces.

The decimal-point DP can be between D0 and D7.

8.3 Remote control-commands

Command	Function
ACKn	Handshake n = 0 off; n = 1 on
CAL	Start calibration
DN	Reset weight display
D.....	Describe weight display (right-aligned)
In	Set Floating Display time n n = 1 t = 0.08 s n = 2 t = 0.16 s n = 3 t = 0.32 s
N	Reset balance
OFF	Switch off balance
PCxxxx	Enter anti-theft code
PDT	Print out date and time
PRT	Start printing (Press „Print” key)
PST	Start print status
Pn ttt.t	Set print mode n = 0 Individually print each value (unstable) n = 1 Individually print each value (stable) n = 2 Print after change of load n = 3 Print after each integration period n = 4 Print on time base in s (ttt.t)
R%k	Set current weight = 100%. k = 0…6 decimal places (k = A: use automatic positioning of decimal point)
REF%k rrr...	Set reference weight rrr... for 100%. k = 0…6 decimal places (k = A: use automatic positioning of decimal point)
Rnnn	Set current weight = nnn items
REFrrr...	Set reference weight rrr... for 1 item
Sn	Set stability n n = 0 low n = 1 med n = 2 hi
Bn	Beeper n = 0 off n = 1 on

Command	Function
Ln	Backlight n = 0 off n = 1 on n = 2 auto
SDTmmddyy hhmmss	Set Date and Time (English: Month, Day, Year, Hour, Minutes, Seconds)
Tttt	Tare or set tare to a specific value
Uxnn	Set unit x (1 or 2) of the balance with nn (0 = g, 1 = mg, 2 = kg, ...)
UxS	Switch balance to unit x (1 or 2)
ZERO	Zero balance (provided weight is stable and within the zero position range)

Tab. 8.4 Remote control-commands

NOTE

Each remote control-command must terminate with «CR» «LF».

The commands are acknowledged if required.

8.4 Examples for the remote control of the balance

Input	Description of the function executed
D –––––	Five dashes will be shown
DTEST123	Will show: tESt123
D	The display will be dark
T100	-100.000g (Tare set to 100 g)
T1	-1.00000 g (Tare set to 1 g)
T	Balance will be tared

Tab. 8.5 Examples for remote control

9 Error messages and correction of faults

9.1 Error messages

The following table shows error messages and their possible causes. If you cannot clear the error on the basis of the table, please contact a Precisa Service Engineer.

Error	Possible cause
Err 1	• Change of application: Invalid application selected
Err 3	• Count, Percent: Weight too small
Err 4	• Anti-theft encoding: Code not correct
Err 8	• Switching on: Zero point out of range
Err 9	• Calibration: Calibration bad (repeat calibration)
Err 31	• Calibration: No weight defined

Tab. 9.1 Error messages and their removal

9.2 Notes on correcting faults

The following table shows faults and their possible causes. If you cannot clear the fault on the basis of the table, please contact a Precisa Service Engineer.

Fault	Possible cause
Weight display does not light	• Balance not switched on • Connection to power adaptor is interrupted • Power supply has failed (interruption to current) • The power adaptor is defective • Batteriy or Accupack empty
„OL” is shown in display	• The weight range has been exceeded (Observe information on the maximum weight range)
„UL” is shown in display	• The weight range is below the range of the balance (Weighing pan missing)
The weight display fluctuates continuously	• The draft is too strong at the balance location • The balance support is vibrating or varying • The weighing pan is touching a foreign body • The time chosen for Floating Display is too short • The material being weighed is absorbing moisture • The material being weighed is being blown away, is evaporating or is subliming • Strong temperature variations in the material being weighed
Results of weighing are clearly incorrect	• The balance was not correctly tared • The balance is not correctly levelled • The calibration is no longer correct • There are strong temperature variations
There is no display or only dashes	• The stability control (Balance functions) is set too sensitively • The time selected for Floating Display is unsatisfactory

Fault	Possible cause
Configuration menu cannot be changed	• The password lock is activated in the configuration menu
The display flashes continuously during calibration	• The balance location is not quiet enough (Interrupt calibration with «**ON/OFF**» and relocate the balance in a better position) • Use of an imprecise calibration weight

Tab. 9.1 Possible faults and their removal

10 Practical examples

10.1 Changing the configuration menu

See Chapter 4.5.1 “Activating the configuration menu”, for the activation of the configuration menu.

10.1.1 Setting the Print functions

In order to alter the print parameters proceed as follows:

PrInt SET	• Press «**MODE**» and hold down until „PrInt SET“ appears. • Release the «**MODE**»-button.
A-StArt OFF	• Press «**MODE**» briefly. „A-StArt ...“ will appear.
A-StArt ON	• Press «**MODE**» repeatedly, until the desired setting is displayed (ON or OFF will flash).
ModE ST	• Press «**MODE**» and hold down the button until the next print function appears („ModE ...”). • Release the «**MODE**»-button.
ModE TIM	• Press «**MODE**» repeatedly, until the desired setting is displayed.

- Press «**MODE**» again and hold down the button until the next print function appears. Change the setting in the same way.
- Press «**PRINT**» to return to „PrInt SET“.
- Press «**PRINT**» again to exit menu.

10.1.2 Activation of password protection

The possibilities for setting the password protection are described in Chapter 5.8 “Password protection”.

In order to activate password protection, proceed as follows:

- - - - PWD	• Press «**MODE**» and hold down button until „- - - - PWD“ appears. • Release the «**MODE**»-button.
7000 PWD	• Press «**MODE**» briefly. The first digit of the password will flash. • Enter the first digit by briefly pressing «**MODE**» repeatedly.
7900 PWD	• Press «**MODE**» until the second digit flashes. • Enter the second digit by briefly pressing «**MODE**» repeatedly.
7914 PWD	• In the same way enter the third and fourth digit of the password. • Hold down «**MODE**» until input is complete (no digit flashing).
ProtEct OFF	• Press «**MODE**» briefly. „ProtEct ...“ will appear. • Press «**MODE**» repeatedly, until the desired data-protection is displayed (the setting will flash).
7914 NEW	• Press «**MODE**» and hold down button until „7914 NEW“ appears. • Release the «**MODE**»-button.
7914 NEW	• Your own new password can now be entered in a similar manner to the foregoing.
- - - - PWD	• Press «**PRINT**» to return to „- - - - PWD“. • Press «**PRINT**» to exit menu.

10.2 Selection of an application program

See Chapter 4.5.2 “Activating the application menu” for the activation of the application menu.

10.2.1 Setting for Counting by weighing

For Setup, see Chapter 6.5 “Application «Count»”
To count uniformly heavy objects such as coins, screws or similar things, proceed as follows:

OFF APP	• Press «**MODE**» and hold down button until the currently set application appears („... APP“). • Release the «**MODE**»-button.
Count APP	• Press «**MODE**» repeatedly, until „Count APP“ is displayed (the application will flash). • Press «**PRINT**» to confirm the input.
SETUP	• Press «**MODE**» until „SETUP” appears. • Release the «**MODE**»-button.
5 REF	• Press «**MODE**» briefly. The currently set reference quantity appears.
0005REF	• Press «**MODE**» briefly. The first digit of the reference quantity will start to flash. • Enter the first digit by briefly pressing «**MODE**» repeatedly.
0105REF	• Press «**MODE**» until the second digit flashes. Enter the second digit by briefly pressing «**MODE**» repeatedly.
0100 REF	• In the same way enter the third and fourth digit of the reference quantity. • Hold down «**MODE**» until input is complete (no digit flashing). • Press «**PRINT**» twice to exit menu.

- Place the set number of objects on the weighing pan.
- The reference weight for the count will be defined by briefly pressing the «**REF**»-button.
- Press «**MODE**» briefly to switch between the weight display („bALAncE“) and the count display („Count“).

11 Maintenance and servicing

The balance must be treated carefully and cleaned regularly. It is a precision instrument.

⚠ DANGER

For maintenance-work, the balance must be separated from the power supply (remove power adaptor plug from socket). Also ensure that the balance cannot be reconnected to the power supply during the work by a third party.

Take care during cleaning that no liquid penetrates into the appliance. If liquid is spilt on the balance, the latter must immediately be disconnected from the electricity supply. The balance may only be used again after it has first been checked by a Precisa Service Engineer.

The connections on the rear of the appliance and the power adaptor may not come into contact with liquids.

Regularly dismantle the weighing pan and the weighing pan holder and remove any dirt or dust from under the weighing pan and on the balance housing with a soft brush or a soft, lint-free cloth, moistened with a mild soap solution.

The scale and the holder can be cleaned under running water. Take care that both parts are completely dry, before they are re-installed on the balance.

⚠ CAUTION

Never use solvents, acids, alkalis, paint thinners, scouring powders or other aggressive or corrosive chemicals for cleaning, since these substances attack the surfaces of the balance housing and can cause damage.

The regular maintenance of the balance by your Precisa Service Representative will guarantee unrestricted functioning and reliability over many years and will extend the lifespan of the balance.

12 Transport, storage and disposal

12.1 Transportation and shipping of the balance

Your balance is a precision instrument. Treat it carefully.

Avoid shaking, severe impacts and vibration during the transportation.

Take care that there are no marked temperature fluctuations during the transportation and that the balance does not become damp (condensation).

! NOTE
The balance should preferably be dispatched and transported in the original packaging to avoid transportation damage.

12.2 Storage of the balance

If you would like to take the balance out of service for an extended period, disconnect it from the electricity supply, clean it thoroughly (see Chapter 11 “Maintenance and servicing”) and store it in a place which fulfils the following conditions:

- No violent shaking, no vibrations
- No large temperature fluctuations
- No direct solar radiation
- No moisture

! NOTE
The balance should preferably be stored in the original packaging, since this provides optimal protection for the balance.

13 Accessories and customer service

13.1 Accessories

Accessory	Article-number
Data-cable RJ45 / DB9 Female, 1,5m	350-8557
Data-cable RJ45 / DB25 Female, 1,5m	350-8558
Data-cable RJ45 / DB25 Male, 1,5m	350-8559
Hooks for under-floor weighing	350-8561

13.2 Customer service

Please direct any queries or orders to:

Precisa Gravimetrics AG
Moosmattstrasse 32
CH-8953 Dietikon
Switzerland

Phone + +41-44-744 28 28
Fax. + +41-44-744 28 38

For information on local customer service stations:
http://www.precisa.ch

14 Further information

14.1 Notes on the Weighing mode

14.1.1 Set Weighing mode: Floating Display

The value set for Floating Display defines the period, after which each new measurement is displayed.

For the definition of this period, the quality of the balance-location is crucial. The stability control must also be suitably chosen.

Recommended values:

- Optimal balance location: FLd 0.08
- Good balance location: FLd 0.16
- Critical balance location: FLd 0.32

NOTE

The value of the Floating Display is a function of the stability control and the balance location. For balance location, see Chapter 3.4 “Choice of a suitable location” and Chapter 5.5 “Weighing mode”.

14.1.2 Set Weighing mode: Stability control

The value set for the stability control depends on the quality of the balance location and must be correctly chosen in order to obtain optimal, reproducible results. Choose:

- „StAbiL HI“ at an **optimal** balance location,
- „StAbiL MED“ at a **good** balance location or
- „StAbiL LOW“ at a **critical** balance location

14.1.3 Set Weighing mode: Auto-Standby

The Auto-Standby mode turns off the balance automatically, if:

- the balance is tared and has shown „Zero” for at least 5 minutes
- the automatic zero correction „Auto-Zero” is activated.

It is possible to start the balance again after it has been switched off by an automatic Auto-Standby:

- Briefly depress any key
- Put a weight on the scale

! NOTE
The balance needs to be switched on with «**ON/OFF**» when the power is supplied by a battery or an accupack.

14.1.4 Set Weighing mode: Auto-Zero

If the automatic zero correction „Auto-Zero” is activated, the balance always gives a stable zero (e.g. even with room temperature fluctuations).

14.2 Notes on calibration

The calibration of the balance is fixed in the configuration menu (see Chapter 3.7 “Calibration of the balance” and Chapter 5.4 “Calibration functions”).

Possible types of calibration, depending on the model of balance:

- External calibration by means of ICM (Intelligent Calibration Mode)
- External calibration with freely selectable weightn

! NOTE
The calibration can be interrupted at any time by pressing «**ON/OFF**».

14.2.1 External calibration by means of ICM

Depending on the type of balance, calibration weights in steps of 10 g, 50 g, 100 g and 500 g can be used, where the calibration weight must correspond to the precision of the balance.

For an external calibration by means of ICM, „ModE EXT“ must be selected in the configuration menu (see Chapter 5.4 “Calibration functions”).

- Switch to „bALAncE” with the «**MODE**»-key.

CAL

- Press «**T**» until „CAL” appears.

- - 0000 9

- The balance carries out a Zero measurement (- - 0000 g is shown flashing).

- - 200 9

- After the zero measurement the display flashes with the recommended calibration weight.
- Place the calibration weight on the pan.

- - 200 9

- The display continues to flash.
- Calibration is complete when the display stops flashing.

+ 200 9

14.2.2 External calibration with freely selectable weight

For an external calibration with user-definable weight, „ModE DEF" must be selected in the configuration menu (see Chapter 5.4 "Calibration functions").

Then, the effective value of the calibration weight (DEF. n.nnn g) must be entered with up to tenfold precision compared with the balance.

NOTE
If calibration is carried out with the free weight, then only this weight may be used.

Then proceed as follows:

- Switch to „bALAncE" with the **«MODE»**-key.

CAL

- Press «**T**» until „CAL" appears.

- - 0000 9

- The balance carries out a Zero measurement (- - 0000 g is shown flashing).

- - 232 9

- After the zero measurement the display flashes with the previously entered calibration weight.
- Place the calibration weight on the pan.

- - 232 9

- The display flashes rapidly.
- Calibration is complete when the display stops flashing (the exact weight is shown).

+ 232 9

15 Configuration menu tree

«**MODE**»-button pressed on switching on:

• **UnIt-1**	**g**		
UnIt-1	**g**		*Gramme*
	kg		*Kilogramme*
	---		*-----*
	Bht		*Bath*

• **PrInt**	**SET**		
	A-StArt	ON	*Start print automatically on switching on / off*
		OFF	
	ModE	UST	*Individual print, each value*
		ST	*Individual print, stable value*
		LCH	*Print after load changes*
		CON	*Continuous print after every Integration time*
		TIM	*Continuous print with timebase*
	4	TIM	*Time base in seconds*
	Prt-gLP	**OFF**	*Empty*
		1	*Date and Time*
		2	*additional Product-Id*
		3	*additional Balance-Id*
		4	*additional Operator-Id*
	Prt-ALL	ON	*Gross, Tare and Units*
		OFF	*Empty*

• **CAL**	**SET**		
	ModE	OFF	*Closed*
		EXT	*External*
		DEF	*External with user-defined weight (DEF n.nnn g)*
	0.000	DEF	*Calibration weight for DEF-Mode*

• Mode SET			
		0.08	Integration time in seconds
		0.16	
		0.32	
	StAbiL	LOW	*Setting the Stability control (instability of the balance location)*
		MED	
		HI	
	A-StAnd	**OFF**	*Auto-Standby not-active or active after nn minutes*
		5	
		10	
		30	
	A-ZEro	**ON**	*Automatic zero correction*
		OFF	
	tArE	**ST**	*Tare when load is stable / unstable*
		UST	

• IntErF SET			
	300	BDR	*Baud-rate*
	600		
	1200		
	2400		
	4800		
	9600		
	19200		
	7-E-1	PAR	*Parity*
	7-o-1		
	7-n-2		
	8-n-1		
	HAnd-SH	**NO**	*Handshake function*
		XON	
		HW	

• DAT-TIM SET			
	31.12.99	D.M.Y	*Date*
	23.59.59	H.M.S	*Time*
	FORMAT	**STD**	*Standard*
		US	*US*

• - - - - PWD			
	ProtEct	**OFF**	*No protection*
		MED	*The configuration menu is protected*
		HI	*The configuration menu and the application menu are protected*
	- - - -	NEW	*Enter new password*

• - - - - COD			
	ProtEct	**OFF**	*Encoding off*
		ON	*Encoding on*
	- - - -	NEW	*Enter new code*

• bAcKLit			
		OFF	*Backlight off*
		ON	*Backlight on*
		AUT	*Backlight automatically*

• bEEP			
		OFF	*Acoustic feedback off*
		ON	*Acoustic feedback on*

16 Application menu tree

Press «**MODE**»-button in operation:

• **Application**		
OFF APP		*No application selected*
UnItS		*Different units*
Count		*Parts counting*
PErcEnt		*Percent weighings*

• **Units**			
	UnIt-2	g	*Gramme*
		kg	*Kilogramme*
		---	-----
		Bht	*Bath*
		OFF	*switched off*

• **Count**			
	5	REF	*Preseted reference number of pieces*

• **Percent**			
	dECIMAL	**AUT**	*Automatic determination of the decimal places*
		0	*Display with 0 decimal places*
		1	*Display with 1 decimal places*
		2	*Display with 2 decimal places*
		3	*Display with 3 decimal places*

17 Set and save the configuration

«MODE»- and **«T»**-button pressed on switching on:

• **ConF FCT**	*Load factory-configuration.*
• **ConF USR**	*Load user-configuration.*
• **StorE USR**	*Store present configuration as user-configuration.*